ISSN 2395-1621

DETECTION OF DEFECTS IN INDUSTRIAL PIPES

#1Neha kawale, #2Sonam Kelode, #3Mayuri Kumkar,
#4Prof. Vinod Mulik

1nehakawale86@gmail.com
2sonamkelode99@gmail.com
3mayurikumkar257@gmail.com

#1234Electronics and telecommunication Engineering Department,
Bharati vidyapeeth's college of Enginnering for Womens, Pune, India.

ABSTRACT

In many industries, conventional defects detection methods are performed by human inspectors who sketch defect patterns manually and then resolve them. However, such detection methods are much expensive, inaccurate, complicated as well as time consuming. To overcome these problems, a new method has been introduced to detect and identify the defects in industrial pipes, automatically and effectively which is based on image processing. The proposed method works in three steps. In the first step, it converts the RGB image of the pipe into a gray scale image. Secondly, it extracts the pipe and finally it detects and identifies the defect.

Keywords: Edge Detection, Pre-processing, Matlab software.

ARTICLE INFO

Article History

Received: 19th April 2018

Received in revised form : 19th April 2018

Accepted: 21st April 2018

Published online : 22nd April 2018

I. INTRODUCTION

The detection and identification of defects of industrial pipes is the most important step during the post manufacture inspection. Although, it can be performed manually by experienced human inspectors but such manual inspection method of industrial pipes has a number of drawbacks including high costs, laborious, low efficiency and time consuming. Therefore, an image processing based algorithm for the detection and identification of defects is proposed. There are also some existing systems for defect detection. However, since long time to cope with defect detection, several techniques have been proposed using image processing.

In this new method, detection and classification of defects in industrial pipes is completely based on image processing. The proposed method works in three steps. At the first step, it converts the RGB image of the pipe i.e. input image into a gray scale image. Secondly, it extracts the fault of the pipe and finally it identifies the defect.

In proposed system, the Image processing is divided into three sections. In the first section, it carries out some pre-processing in the whole input image including gray scale conversion, threshold effect and noisy object elimination.

In the next section, the pipe is extracted from the whole image and in the last one, defect detection and identification method is applied.

II. PROPOSED METHODOLOGY

In proposed system, the Image processing is divided into three sections. In the first section, it carries out some preprocessing in the whole input image including gray scale conversion, threshold effect and noisy object elimination.
In the next section, the pipe is extracted from the whole image and in the last one, defect detection and identification method is applied.

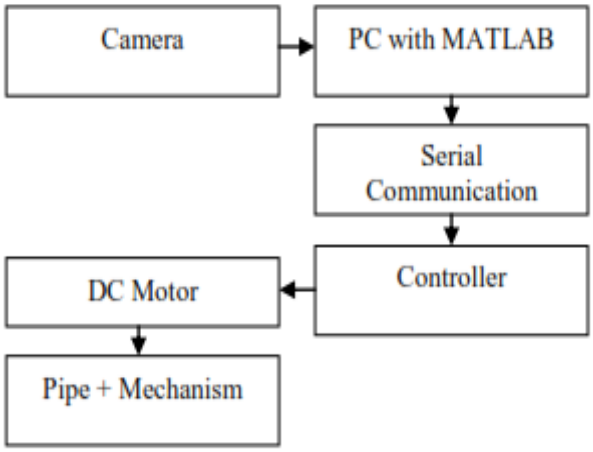

Fig.1. System Block Diagram

In section one, firstly the RGB image is converted to a gray scale image and then threshold effect is applied with some value. The resultant image may contain some noisy objects which can create erroneous results. To minimize their effect, these unwanted objects are eliminated according to their sizes. In second section a pipe is extracted from the image. Then these two images are subtracted and this resultant image will be the fault on pipe.

Again the resultant image may contain some noisy elements. So to reduce their effect, these unwanted object elimination is done according to their sizes. Finally some fundamental features i.e., area and eccentricity are calculated for each object. Afterwards the defects such as hole and crack are distinguished based on their eccentricity. In proposed method detects and identifies the defects in the industrial pipes through image processing.

This image processing part consist of Image acquisition, gray scale conversion, threshold effect, unwanted object elimination, pipe extraction and defect detection and identification.

III. DESIGN DEVELOPMENT

A. Algorithm:

1) Start

2) Pre-processing

The raw data (RGB image) acquired from digital camera are pre-processed for further data analysis. It includes the gray scale conversion, threshold effect and elimination of noisy objects which are present in the raw image

3) RGB to Gray scale conversion

Input image is acquired from digital camera and then it is converted into gray scale image.

4) Apply guassian filtering to remove unwanted noise

5) Apply Morphological operations

6) Defect detection and Identification:

By performing mathematical operations, the two images i.e. image with fault and only pipe image are subtracted and resultant image will have the only faults that are on the pipe. This is how the fault is detected.

7) Parameter Estimation

B. Flow chart

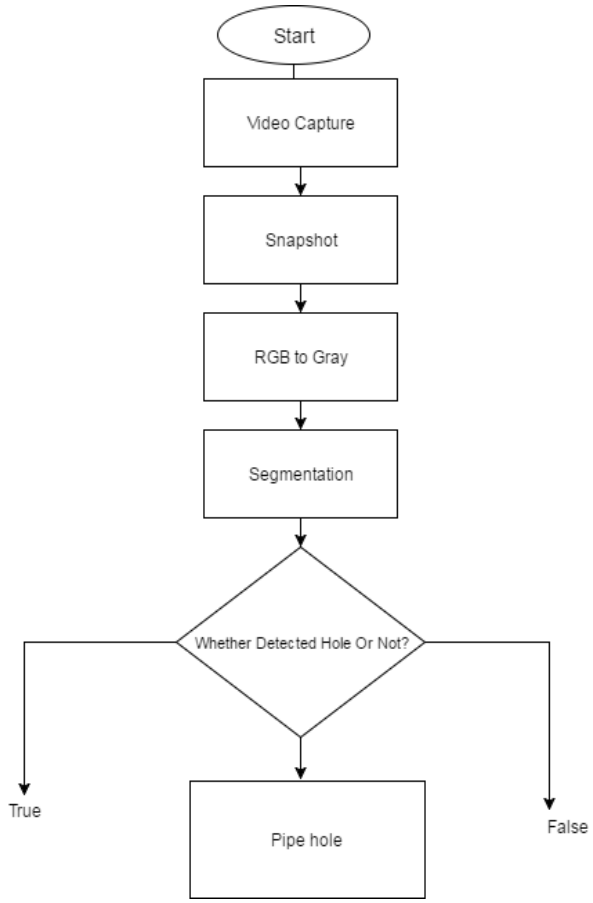

Fig. 2. Flow chart

IV. SIMULATION AND PROTOTYPE

A. Simulation and its result

Whole system is designed by using proteus software. This contains LDR sensors, motors, ultrasonic sensor, microcontroller etc. By using those algorithms we have design the program and it is built into the microcontroller. The simulation diagram of the proposed system is as shown in figure 5.

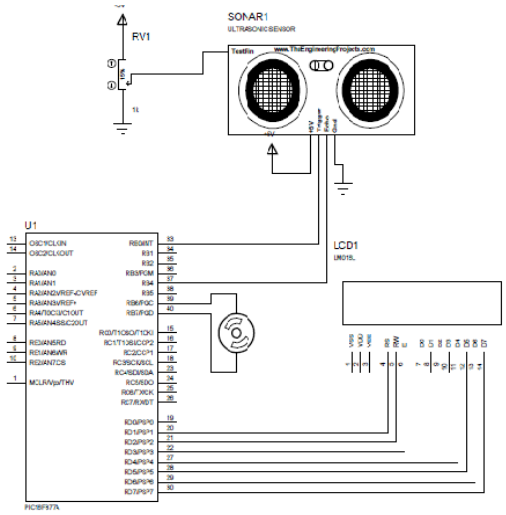

Fig. 3. Simulation diagram of the proposed system

According to the requirement we have programed the microcontroller. If the distance recorded by ultrasonic sensor is less than 400 cm the motor will move into reverse direction if it is above 400cm then it is in forward direction

B. Prototype

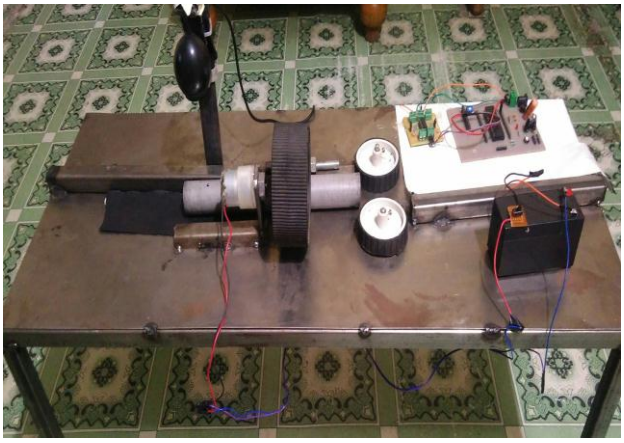

Fig 4. Prototype for proposed model

The prototype for Detection of defects in industrial pipes is illustrated in the fig. 4.

This prototype consists of one dc motor of 100 rpm for Rotating pipes. This motor is controlled by the microcontroller pic16f877a. The ultrasonic sensor is used to detect whether the pipe is present or not. The ball bearings are used to rotate the pipe in the forward direction.

V. CONCLUSION

In this project, the analysis of different methods for defect detection and identification is done. An image processing based method for detecting defects (hole, crack and imperfection in diameter) in industrial pipes is proposed. In next task the defects will be distinguish according to their size and shape and overall system will be implemented. It will also give the idea about major defect and minor defect. Experimental results will demonstrate the system as effective for dealing with the industrial pipe images.

ACKNOWLEDGEMENT

The authors wish to thank the faculty of BVCOEW for their assistance and guidance.

REFRENCES

[1] Md. Ashraful Alam and M M Naushad Ali, “An algorithm to detect and identify defects of industrial pipes using image processing” in software knowledge, information management and Applications (SKIMA), 8th international conference 2014.

[2] I. Abdel-Qader, O. Abudayyeh and M. E. Kelly, "Analysis of edge detection techniques for crack identification in bridges," 1. Comput. Civil Eng. , vol. 17, no.4, pp. 255-263, October 2003.

[3] Wu Xue-Fei, Baihua "Automated assessment of buried pipeline defects by image processing," in Proc. of IEEE International Conference on Intelligent Computing and Intelligent Systems, 2009, vol. 4, pp. 583-587, November 2009.

[4] T. C. Hutchinson and Z. Chen, "Improved image analysis for evaluating concrete damage," 1. Comput. Civil Eng. , vol. 20, no.3, pp. 210-216, May 2006.

[5] Shivprakash Iyer and S. K. Sinha. "A robust approach for automatic detection and segmentation of cracks in underground pipeline images," Image and Vision Comput., vol. 23, no. 10, pp. 921-933, September 2005.

[6]Tung-Ching Su, Ming-Der Yang, Tsung-Chiang Wu and Ii-Yuan Lin, "Morphological segmentation based on edge detection for sewer pipe defects on CCTV images. " Expert Systems with Applications, vol. 38, no. 10, pp. 13094-13114, September 2011

